Littfinski **D**aten**T**echnik (**LDT**)
Kleiner Ring 9 • D-25492 Heist/Germany • Phone: 0049 4122 / 977 381 • Fax: 0049 4122 / 977 382

Sample connections:

Feedback module with integrated detection of occupied tracks for the RS-feedback bus (Lenz Digital plus)

RS-8

(Version 2.2)

1.1 Track occupancy detection at a two-conductor system with one isolated rail!

Each isolated track section get the supply from the track occupancy detector via the output which is marked with a dotted line.
This makes it possible to control a total of 8 track sections.

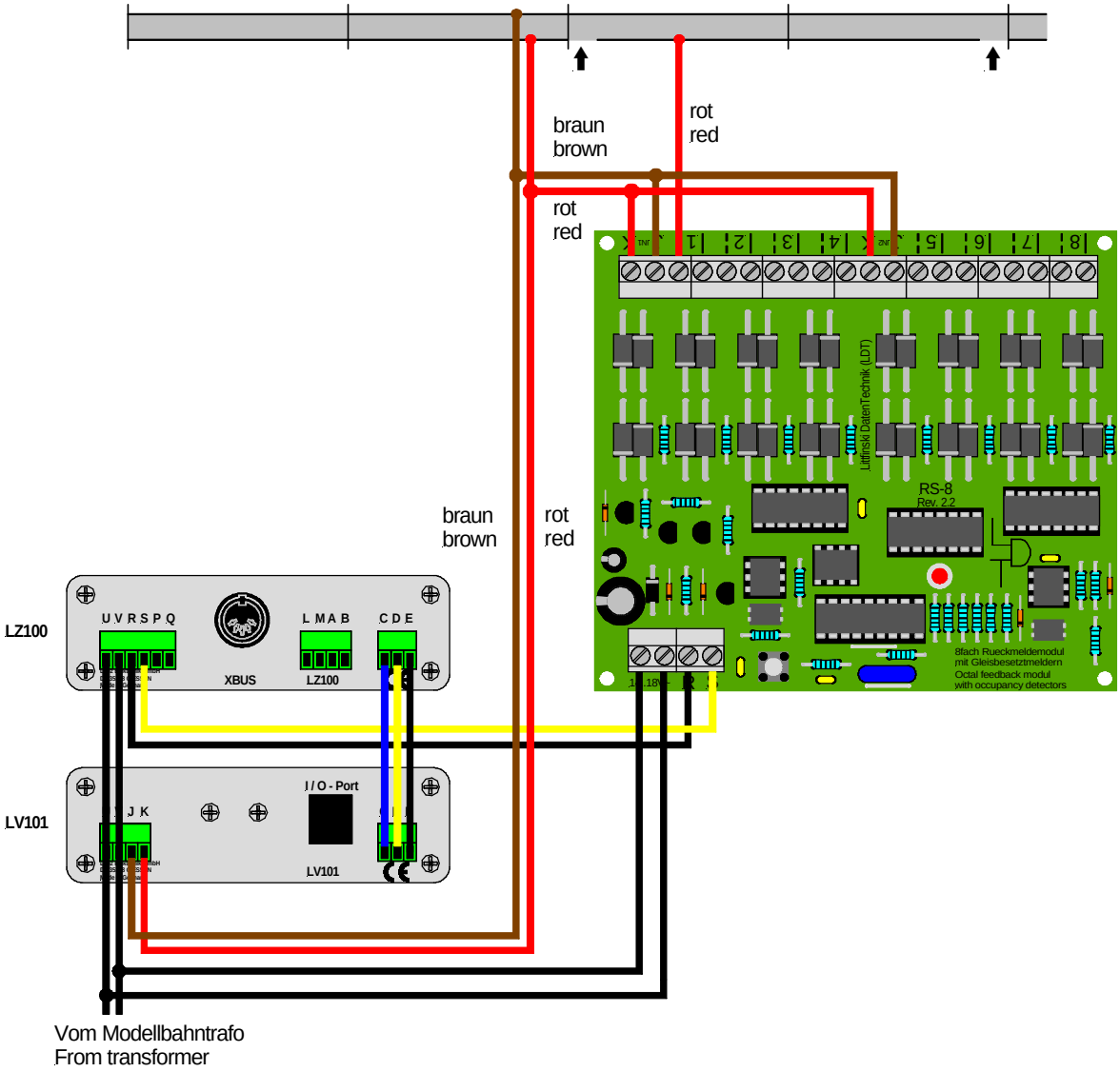

Littfinski **D**aten**T**echnik (**LDT**)
Internet / e-mail
http://www.ldt-infocenter.com
info@ldt-infocenter.com

Address
Kleiner Ring 9
D-25492 Heist/Germany

Phone
0049 4122 / 977 381
Fax
0049 4122 / 977 382

Banking connection
Kreissparkasse Suedholstein
(bank code 230 510 30)
Account-No. 3 99 43 57

1.2 Track occupancy detection at a two-conductor system with two isolated rails!

Isolated track sections get the supply complete via one output of the track occupancy detector. This is very convenient for modular layouts with detachable single components.
This makes it possible to control a total of 8 track sections.

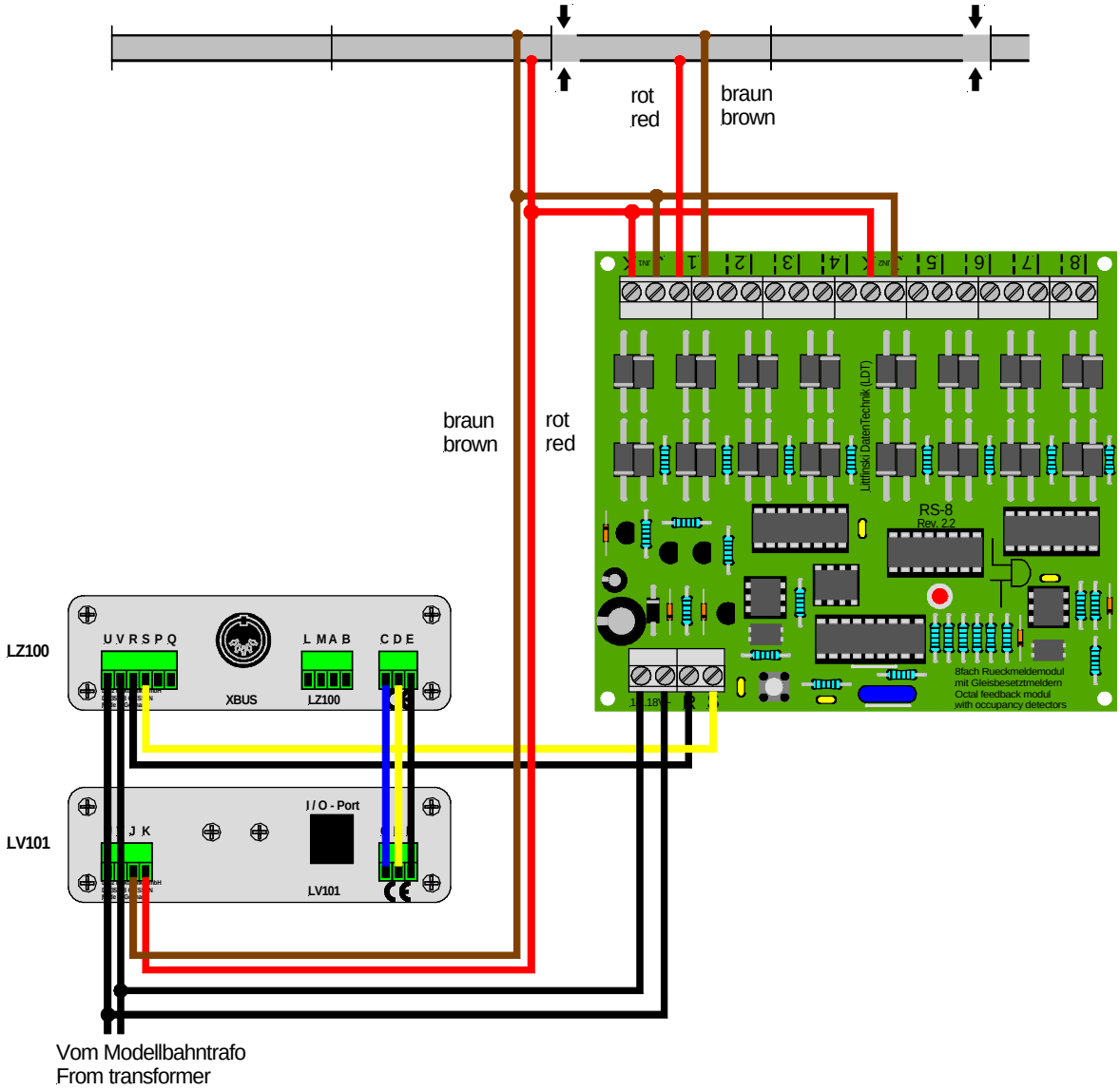

1.3 Connect the track occupancy detector to the RS-feedback bus.

The inputs R and S of the 4-poles clamp have to be connected to the equal marked clamps at the central unit LZ100.
Several feedback modules (RS-8, LR101, LS110 etc.) can be simply connected in parallel.

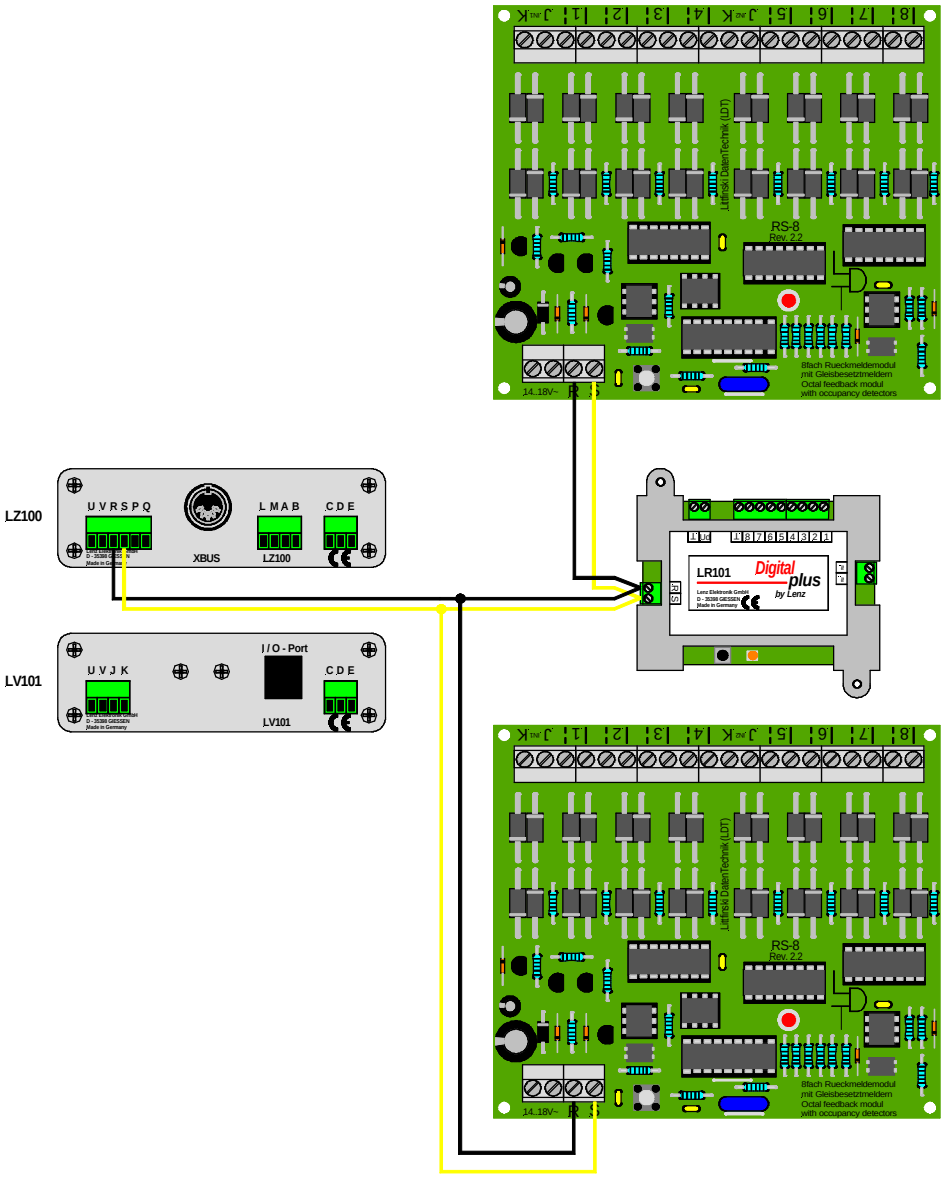

Littfinski **D**aten**T**echnik (**LDT**)
Kleiner Ring 9 • D-25492 Heist/Germany • Phone: 0049 4122 / 977 381 • Fax: 0049 4122 / 977 382

1.4 Disconnectable track section controlled by track occupancy detector.

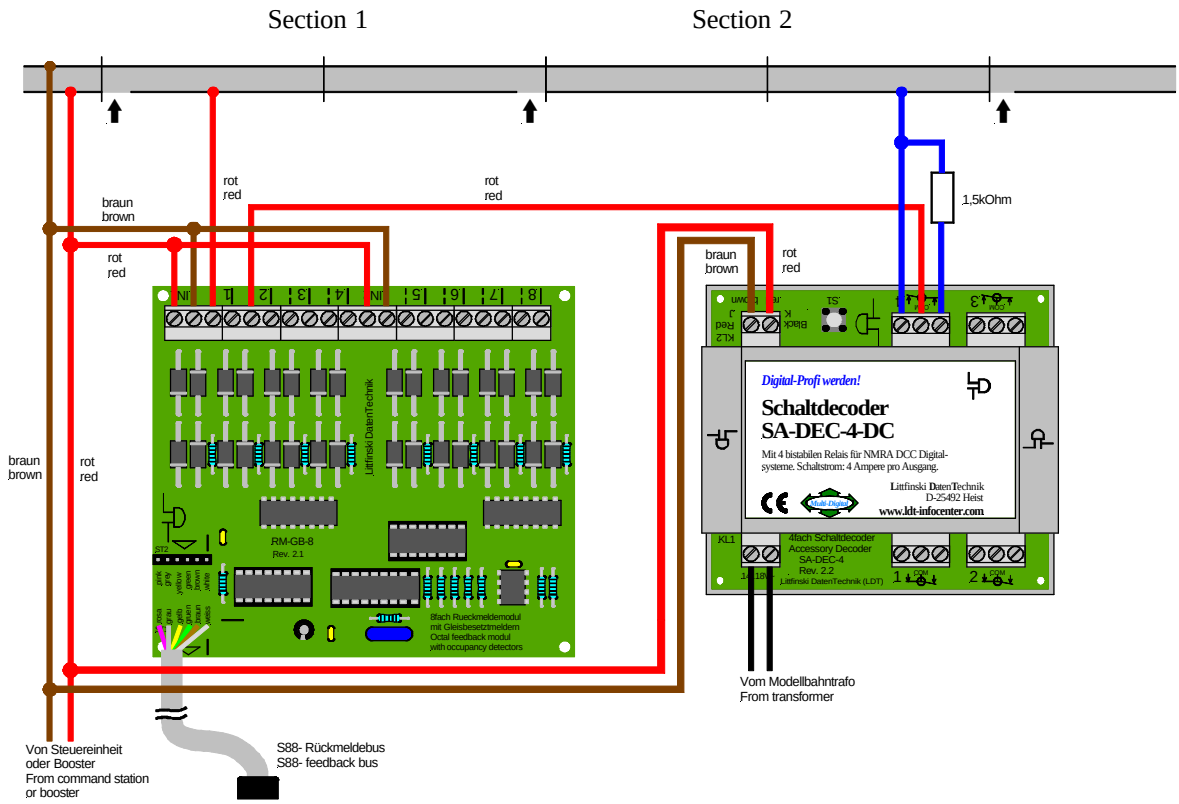

Track occupancy report and disconnectable track section with track occupancy detector RS-8 and SA-DEC-4

The isolated sections 1 and 2 are getting the supply of digital voltage via the feedback module with integrated track occupancy report **RS-8**. As soon as there is a current consumer within a monitored section this will be reported via the RS feedback bus to the central unit LZ100.

The section 2 can be additionally switched current-free via an output of the switch decoder **SA-DEC-4**. If there will be illuminated trains parked they will not consume expensive digital current. The resistor of 1,5 k-Ohm has to be assembled in any case to assure that the track occupancy monitor is able to supply an occupancy report even at a current-free status in case a current consumer will be within the monitored section. The value of the resistor assures that the train-illumination will not be switched on during switched off status.

Littfinski **D**aten**T**echnik (**LDT**)
Kleiner Ring 9 • D-25492 Heist/Germany • Phone: 0049 4122 / 977 381 • Fax: 0049 4122 / 977 382

1.5 Track monitoring by two booster circuits.

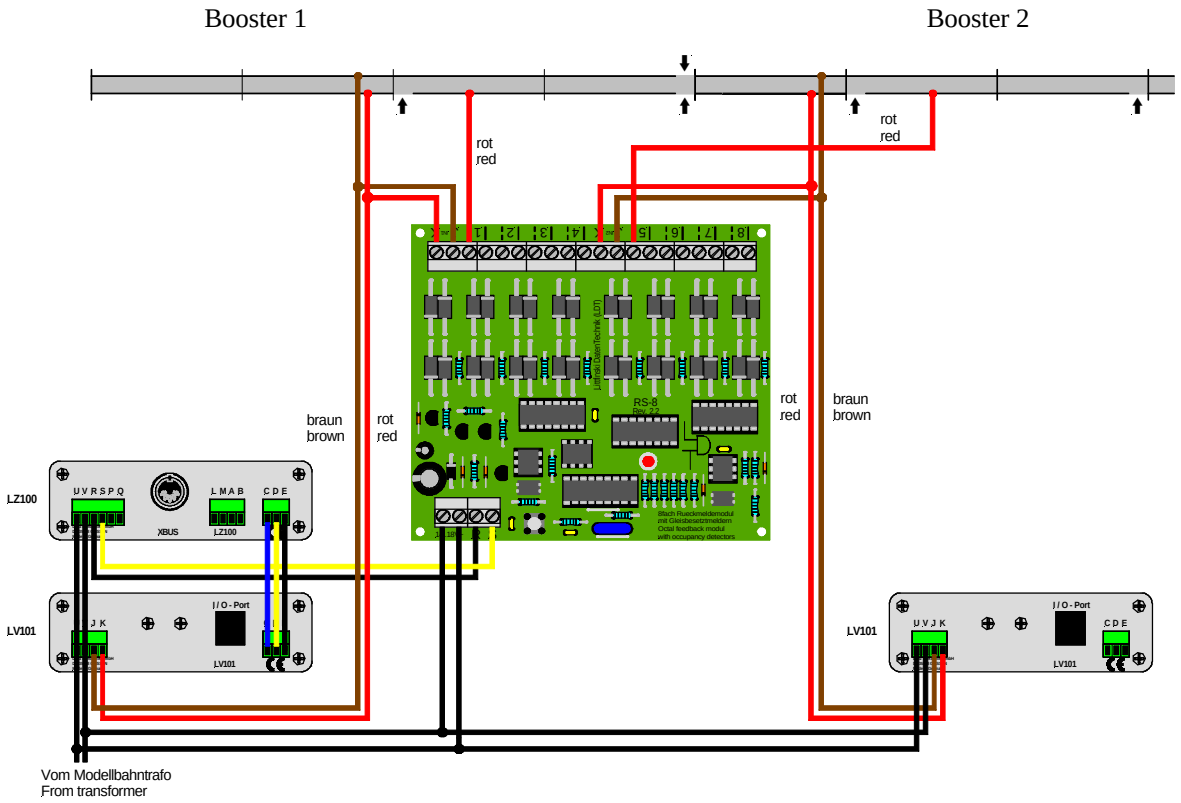

The RS-8 is divided into two 4-fold track occupancy monitors. The booster 1 controls and supplies current via the RS-8 to the left track and the booster 2 to the right track.

The 8-fold track occupancy detector RS-8 is divided into two 4-fold track occupancy monitors from version 2.0.

This makes it possible to control tracks from two different booster circuits. At the above draft the input IN1 of the RS-8 gets the supply from booster 1 and the input IN2 from booster 2.

The monitored tracks 1 to 4 (at the draft track 1 has been indicated) receives the digital current therefore from booster 1 and the tracks 5 to 8 (at the draft track 5 has been indicated) from booster 2.

The partitioning of the RS-8 into two 4-fold track occupancy monitors has got an additional advantage for the control of reverse loops. For further information regarding this issue please load the file "kehrschleife_21_engl.zip" from our web-site (www.ldt-infocenter.com) onto your computer.